Lonten N-channel 650V, 16A Power MOSFET

Description

The Power MOSFET is fabricated using the advanced planer VDMOS technology. The resulting device has low conduction resistance, superior switching performance and high avalanche energy.

Features

- Low $R_{DS(on)}$
- Low gate charge (typ. Q_g = 53.9 nC)
- 100% UIS tested
- RoHS compliant

Applications

- Power factor correction.
- Switched mode power supplies.
- LED driver.

Product Summary

V_{DSS}	650V
I_D	16A
$R_{DS(on),max}$	0.6Ω
$Q_{g,typ}$	53.9C

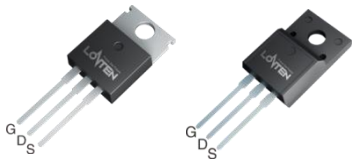

TO-220 **TO-220F**

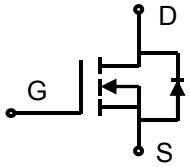

N-Channel MOSFET

Absolute Maximum Ratings

Parameter	Symbol	Value	Unit
Drain-Source Voltage	V_{DSS}	650	V
Continuous drain current (T_C = 25°C)	I_D	16	A
(T_C = 100°C)		11.5	A
Pulsed drain current [1]	I_{DM}	64	A
Gate-Source voltage	V_{GSS}	±30	V
Avalanche energy, single pulse [2]	E_{AS}	605	mJ
Peak diode recovery dv/dt [3]	dv/dt	5	V/ns
Power Dissipation TO-220F (T_C = 25°C)	P_D	44	W
Derate above 25°C		0.35	W/°C
Power Dissipation TO-220 (T_C = 25°C)		180	W
Derate above 25°C		1.44	W/°C
Operating junction and storage temperature range	T_J, T_{STG}	-55 to +150	°C
Continuous diode forward current	I_S	16	A
Diode pulse current	$I_{S,pulse}$	64	A

Thermal Characteristics

Parameter	Symbol	Value		Unit
		TO-220F	TO-220	
Thermal resistance, Junction-to-case	$R_{\theta JC}$	2.85	0.69	°C/W
Thermal resistance, Junction-to-ambient	$R_{\theta JA}$	110	62.5	°C/W

Package Marking and Ordering Information

Device	Device Package	Marking	Units/Tube	Units/Reel
LNC16N65	TO-220	LNC16N65	50	
LND16N65	TO-220F	LND16N65	50	

Electrical Characteristics

T_c = 25°C unless otherwise noted

Parameter	Symbol	Test Condition	Min.	Typ.	Max.	Unit
Static characteristics						
Drain-source breakdown voltage	BV_{DSS}	V_{GS}=0 V, I_D=0.25 mA	650	-	-	V
Gate threshold voltage	$V_{GS(th)}$	V_{DS}=V_{GS}, I_D=0.25 mA	2	-	4	V
Drain cut-off current	I_{DSS}	V_{DS}=650 V, V_{GS}=0 V, T_j = 25°C T_j = 125°C	 - -	 -	 1 100	 μA
Gate leakage current, Forward	I_{GSSF}	V_{GS}=30 V, V_{DS}=0 V	-	-	100	nA
Gate leakage current, Reverse	I_{GSSR}	V_{GS}=-30 V, V_{DS}=0 V	-	-	-100	nA
Drain-source on-state resistance	$R_{DS(on)}$	V_{GS}=10 V, I_D=8A	-	0.48	0.6	Ω
Dynamic characteristics						
Input capacitance	C_{iss}	V_{DS} = 25 V, V_{GS} = 0 V,	-	2640	-	
Output capacitance	C_{oss}	f = 1 MHz	-	235	-	pF
Reverse transfer capacitance	C_{rss}		-	15	-	
Turn-on delay time	$t_{d(on)}$	V_{DD} = 325 V, I_D = 16 A	-	15.4	-	
Rise time	t_r	R_G = 10 Ω, V_{GS}=15 V	-	41.0	-	ns
Turn-off delay time	$t_{d(off)}$		-	88.7	-	
Fall time	t_f		-	17.8	-	
Gate charge characteristics						
Gate to source charge	Q_{gs}	V_{DD}=520 V, I_D=16 A,	-	13.4	-	
Gate to drain charge	Q_{gd}	V_{GS}=0 to 10 V	-	20.1	-	nC
Gate charge total	Q_g		-	53.9	-	
Gate plateau voltage	$V_{plateau}$		-	5	-	V
Reverse diode characteristics						
Diode forward voltage	V_{SD}	V_{GS}=0 V, I_F=16 A	-	-	1.5	V
Reverse recovery time	t_{rr}	V_R=325 V, I_F=16 A,	-	448.4	-	ns
Reverse recovery charge	Q_{rr}	dI_F/dt=100 A/μs	-	5.38	-	μC
Peak reverse recovery current	I_{rrm}		-	24	-	A

Notes:

1. Pulse width limited by maximum junction temperature.
2. L=10mH, I_{AS} = 11A, Starting T_j= 25°C
3. I_{SD} = 16A, di/dt≤100A/us, V_{DD}≤BV_{DS}, Starting T_j= 25°C.

Electrical Characteristics Diagrams

Figure 1. Typical Output Characteristics

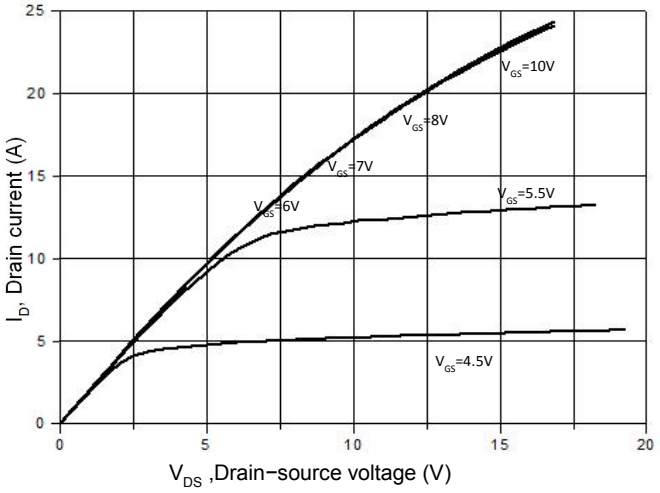

Figure 2. Transfer Characteristics

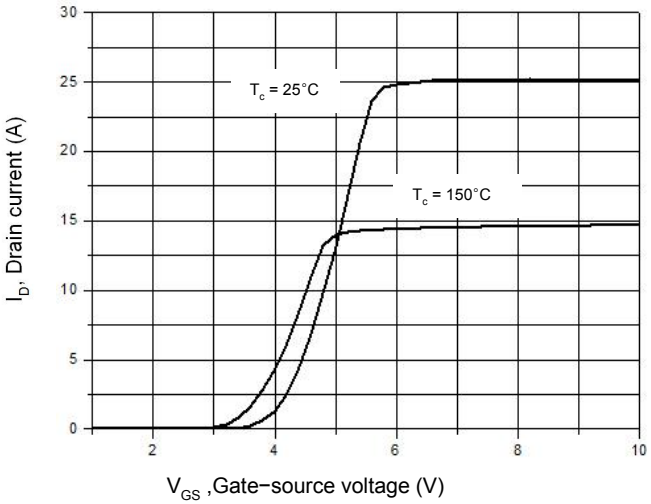

Figure 3. On-Resistance Variation vs. Drain Current

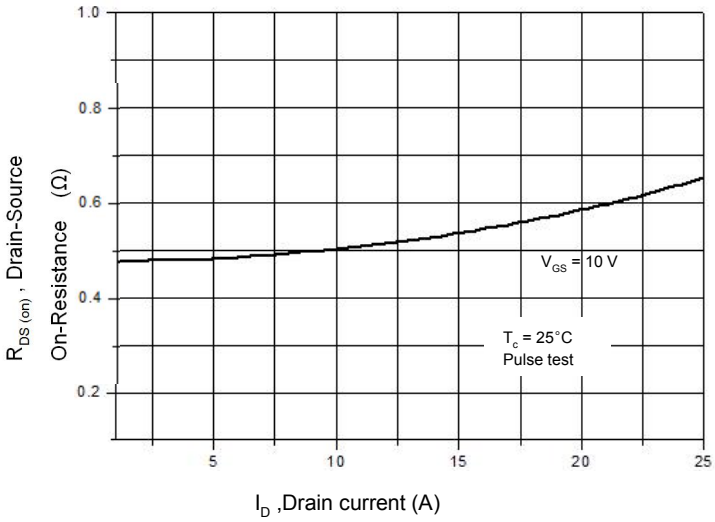

Figure 4. Threshold Voltage vs. Temperature

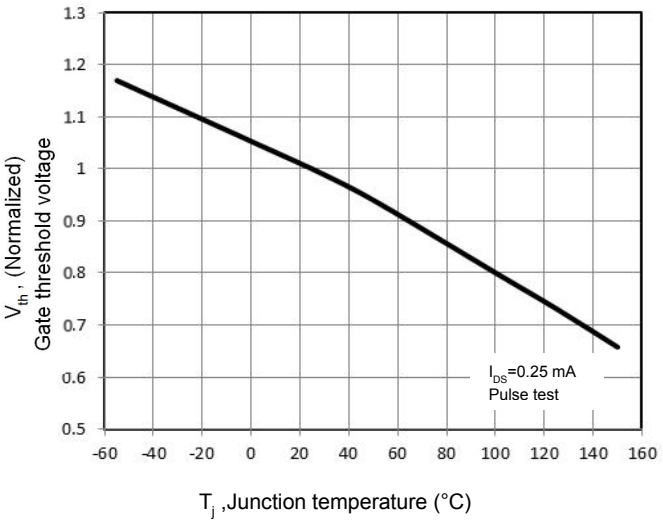

Figure 5. Breakdown Voltage vs. Temperature

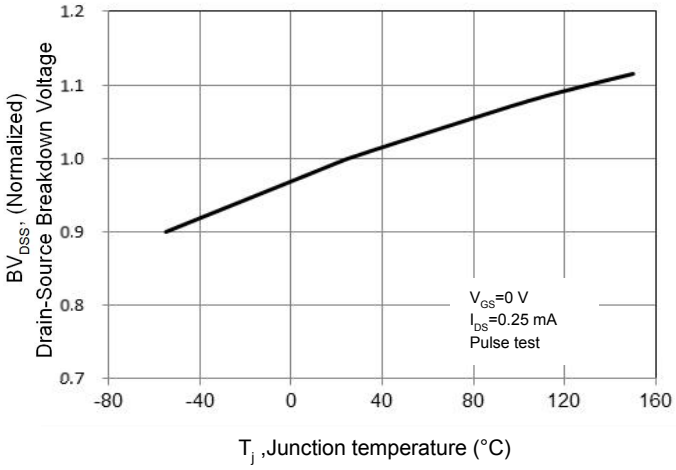

Figure 6. On-Resistance vs. Temperature

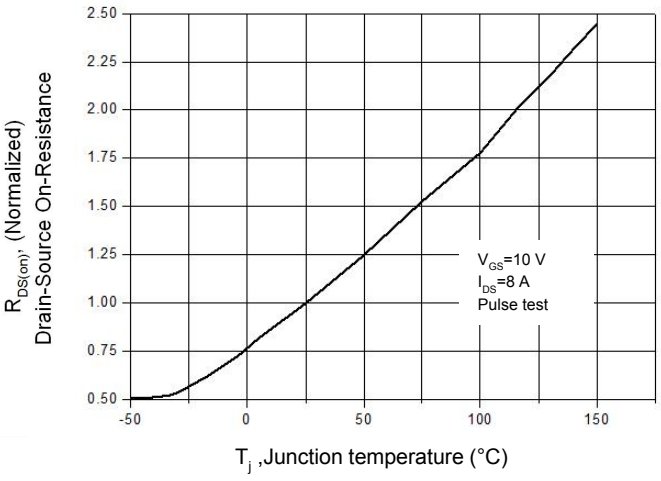

Figure 7. Capacitance Characteristics

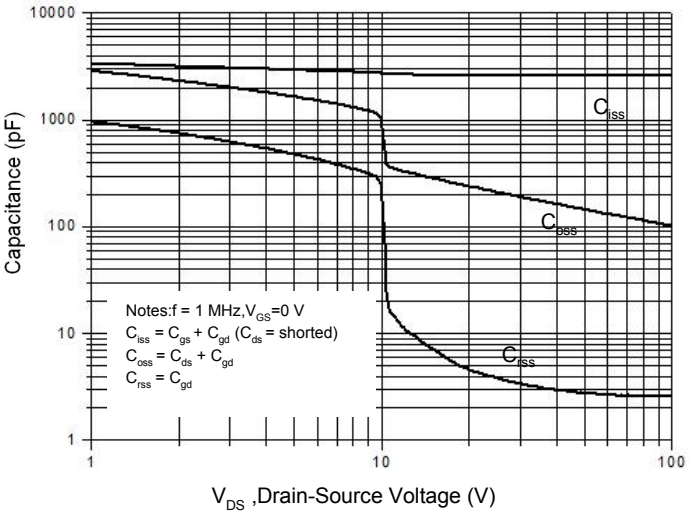

Figure 8. Gate Charge Characteristics

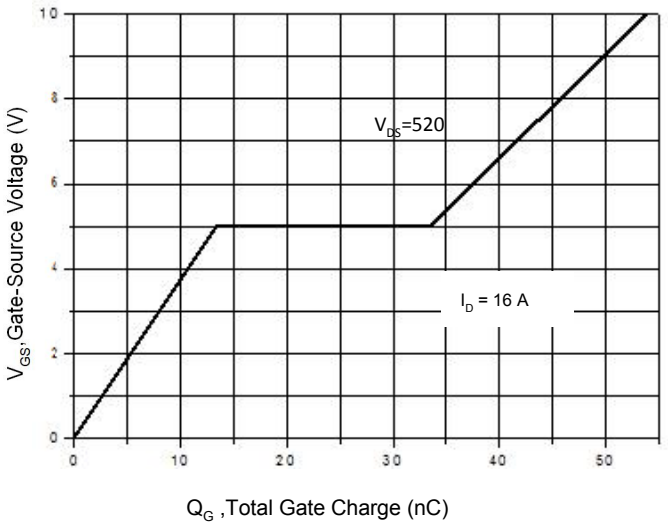

Figure 9. Maximum Safe Operating Area

TO-220F

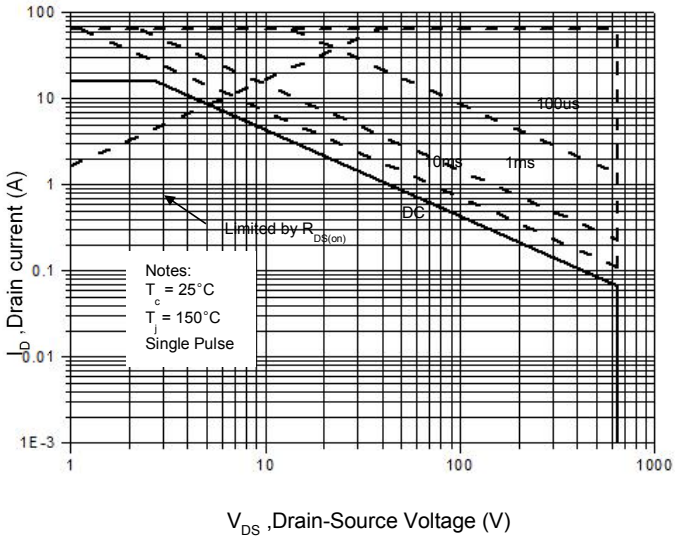

Figure 10. Maximum Safe Operating Area

TO-220

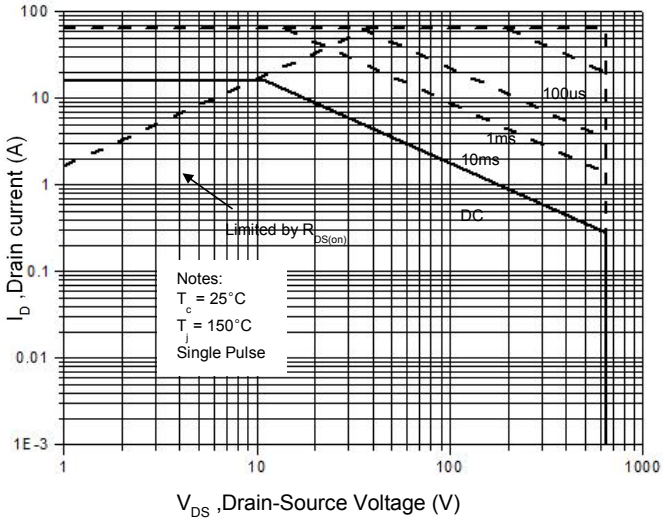

Figure 11. Power Dissipation vs. Temperature

TO-220F

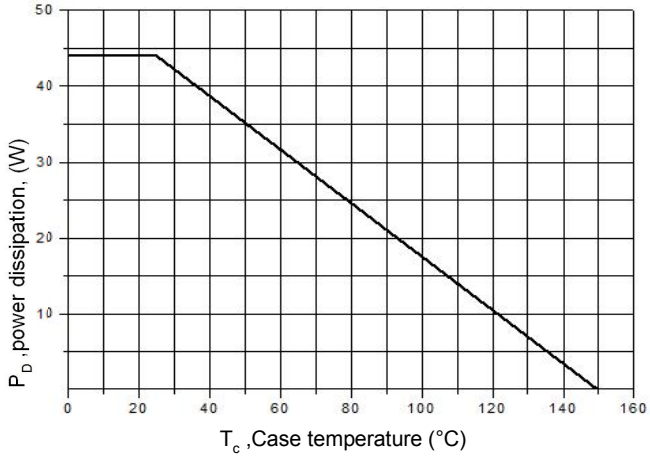

Figure 12. Power Dissipation vs. Temperature

TO-220

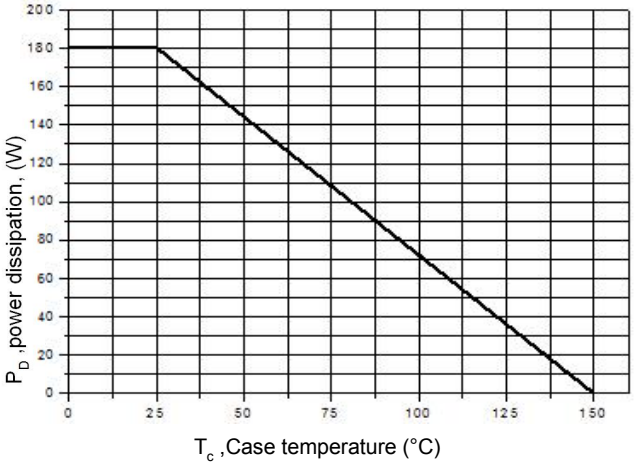

Figure 13. Continuous Drain Current vs. Temperature

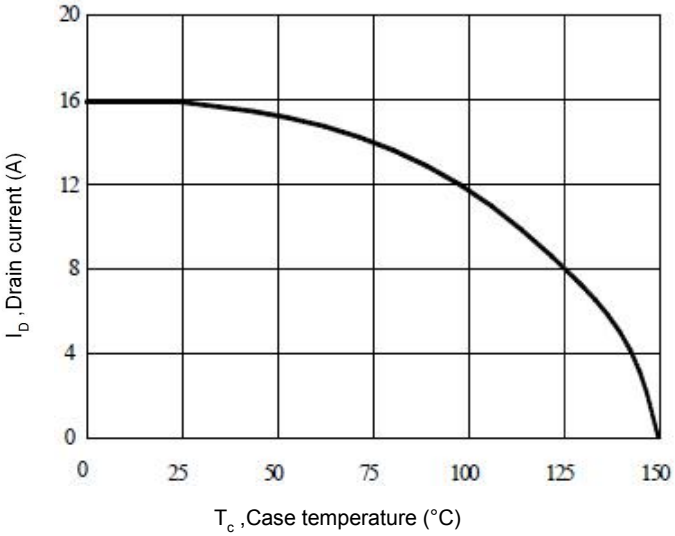

Figure 14. Body Diode Transfer Characteristics

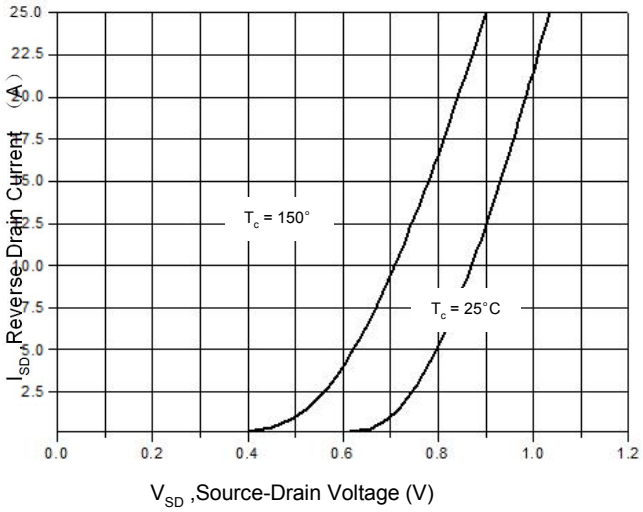

Figure 15 Transient Thermal Impedance, Junction to Case, TO-220F

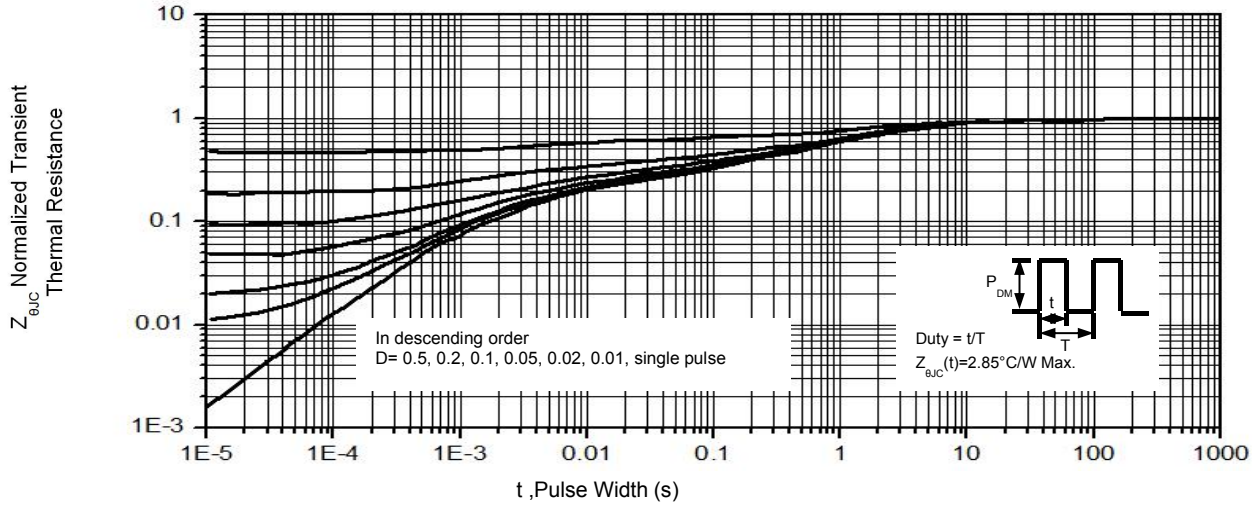

Figure 16. Transient Thermal Impedance, Junction to Case, TO-220

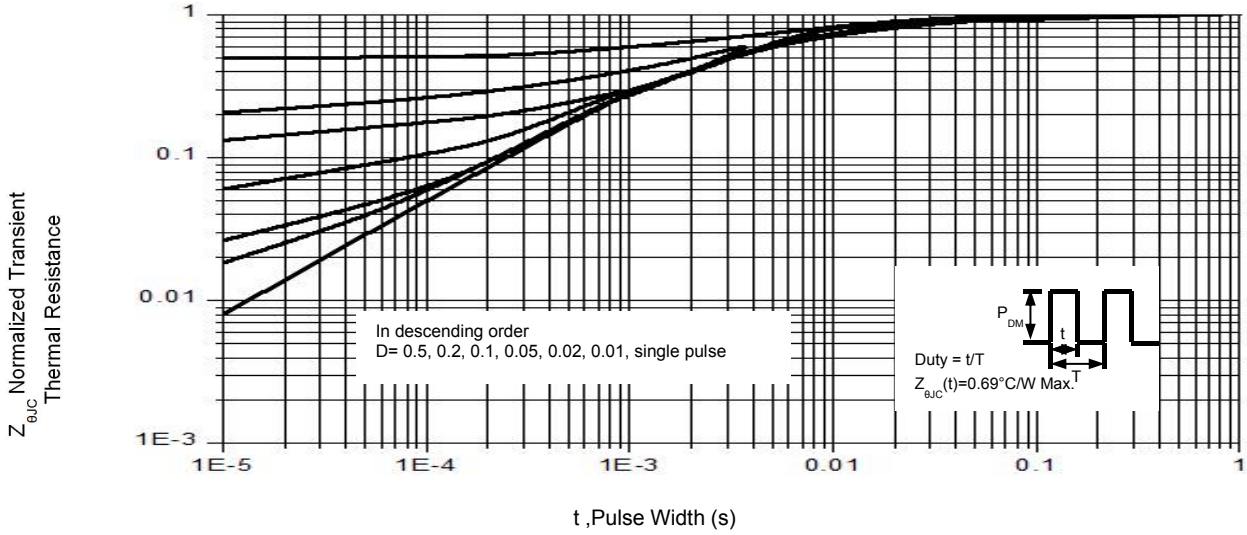

Gate Charge Test Circuit & Waveform

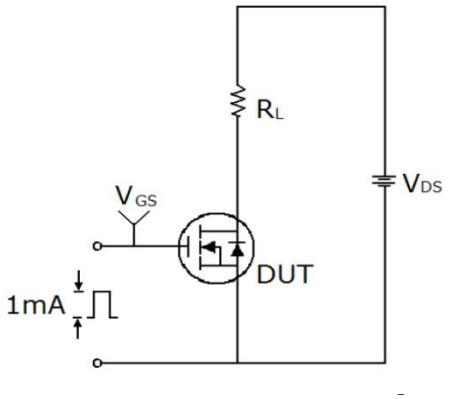

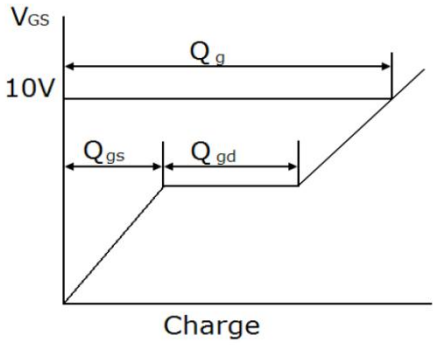

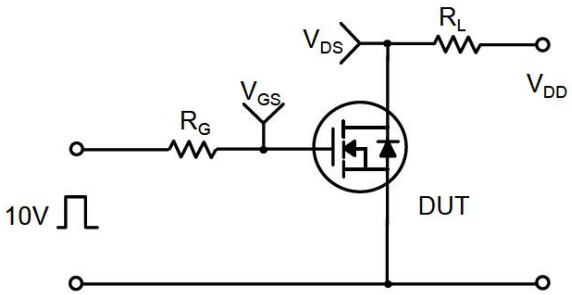

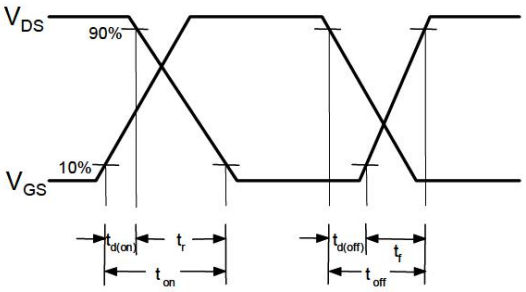

Unclamped Inductive Switching Test Circuit & Waveforms

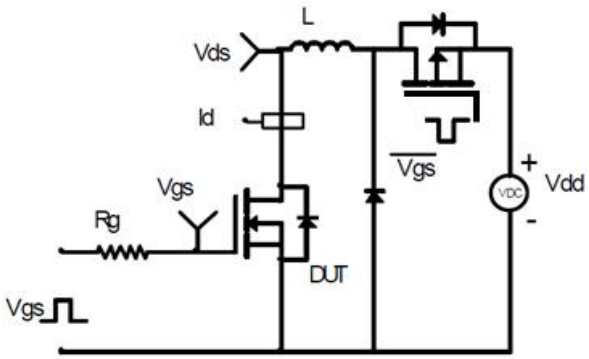

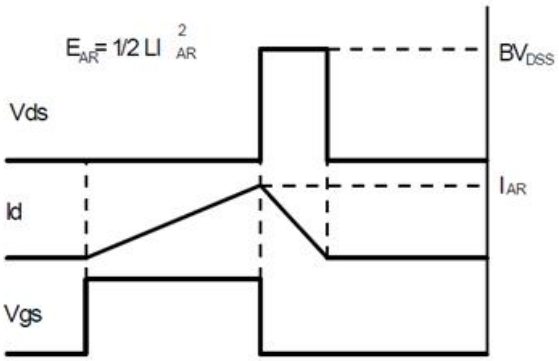

Mechanical Dimensions for TO-220

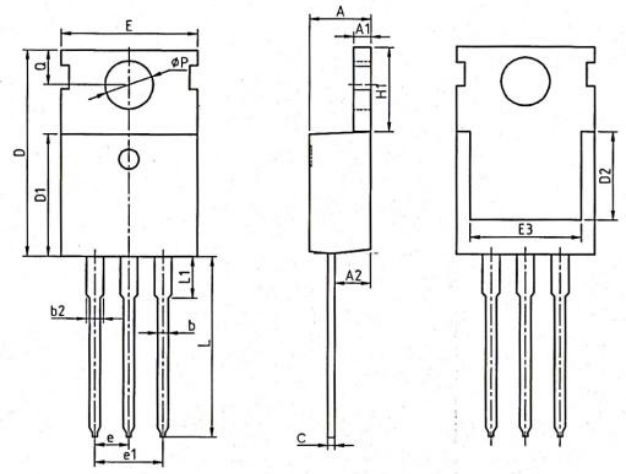

COMMON DIMENSIONS						
SYMBOL	MM			INCH		
	MIN	NOM	MAX	MIN	NOM	MAX
A	4.37	4.57	4.70	0.172	0.180	0.185
A1	1.25	1.30	1.40	0.049	0.051	0.055
A2	2.20	2.40	2.60	0.087	0.094	0.102
b	0.70	0.80	0.95	0.028	0.031	0.037
b2	1.17	1.27	1.47	0.046	0.050	0.058
c	0.45	0.50	0.60	0.018	0.020	0.024
D	15.10	15.60	16.10	0.594	0.614	0.634
D1	8.80	9.10	9.40	0.346	0.358	0.370
D2	5.50	—	—	0.217	—	—
E	9.70	10.00	10.30	0.382	0.394	0.406
E3	7.00	—	—	0.276	—	—
e	2.54BSC			0.1BSC		
e1	5.08BSC			0.2BSC		
H1	6.25	6.50	6.85	0.246	0.256	0.270
L	12.75	13.50	13.80	0.502	0.531	0.543
L1	—	3.10	3.40	—	0.122	0.134
Øp	3.40	3.60	3.80	0.134	0.142	0.150
Q	2.60	2.80	3.00	0.102	0.110	0.118

TO-220 Part Marking Information

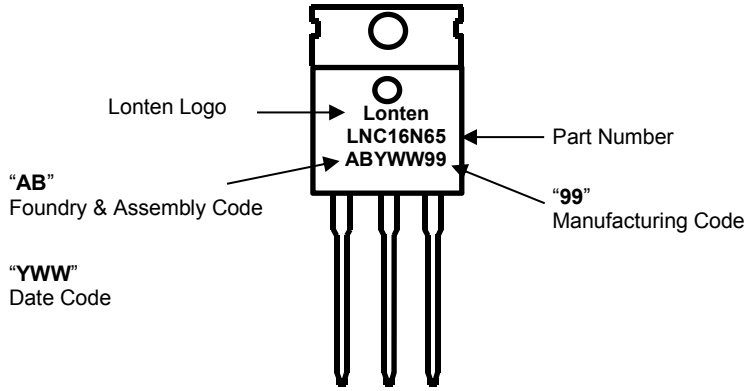

Mechanical Dimensions for TO-220F

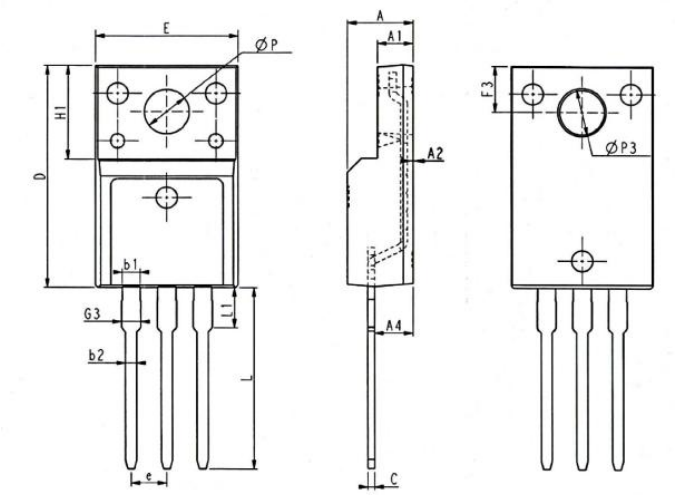

COMMON DIMENSIONS						
SYMBOL	MM			INCH		
	MIN	NOM	MAX	MIN	NOM	MAX
E	9.96	10.16	10.36	0.392	0.400	0.408
A	4.50	4.70	4.90	0.177	0.185	0.193
A1	2.34	2.54	2.74	0.092	0.100	0.108
A2	0.30	0.45	0.60	0.012	0.002	0.024
A4	2.65	2.76	2.96	0.104	0.109	0.117
C	0.40	0.50	0.65	0.016	0.020	0.026
D	15.57	15.87	16.17	0.613	0.625	0.637
H1	6.70REF			0.264REF		
e	2.54BSC			0.1BSC		
ØP	3.03	3.18	3.38	0.119	0.125	0.133
L	12.68	12.98	13.28	0.499	0.511	0.523
L1	2.88	3.03	3.18	0.113	0.119	0.125
ØP3	3.15REF			0.124REF		
F3	3.15	3.30	3.45	0.124	0.130	0.136
G3	1.25	1.35	1.55	0.049	0.053	0.061
b1	1.18	1.28	1.43	0.046	0.050	0.056
b2	0.70	0.80	0.95	0.028	0.031	0.037

TO-220F Part Marking Information

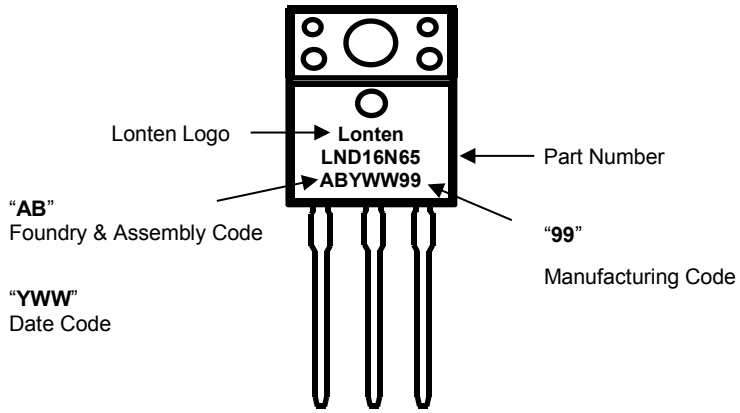

Disclaimer

The content specified herein is for the purpose of introducing LONTEN's products (hereinafter "Products"). The information given in this document shall in no event be regarded as a guarantee of conditions or characteristics. Examples of application circuits, circuit constants and any other information contained herein illustrate the standard usage and operations of the Products. The peripheral conditions must be taken into account when designing circuits for mass production.

LONTEN does not assume any liability for infringement of patents, copyrights, or other intellectual property rights of third parties by or arising from the use of the Products or technical information described in this document.

The Products are not designed or manufactured to be used with any equipment, device or system which requires an extremely high level of reliability the failure or malfunction of which may result in a direct threat to human life or create a risk of human injury (such as a medical instrument, transportation equipment, aerospace machinery, nuclear-reactor controller, fuel-controller or other safety device). LONTEN shall bear no responsibility in any way for use of any of the Products for the above special purposes.

Although LONTEN endeavors to improve the quality and reliability of its products, semiconductor products have specific characteristics such as the occurrence of failure at a certain rate and malfunctions under certain use conditions. Please be sure to implement safety measures to guard them against the possibility of physical injury, and injury or damage caused by fire in the event of the failure of a LONTEN product.

The content specified herein is subject to change for improvement without notice. When using a LONTEN product, be sure to obtain the latest specifications.